DocuSign Envelope ID: 3F210419-10E7-418B-B9DE-EFEABE23958E

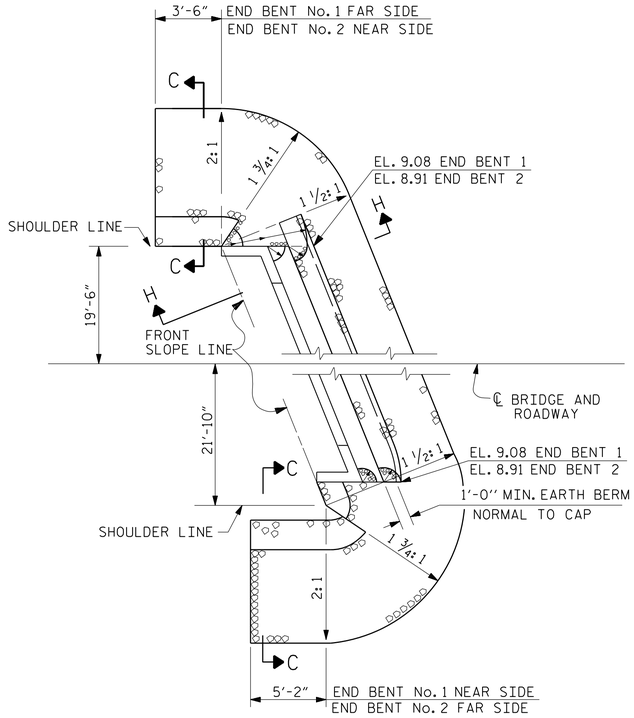

SHOULDER RIP RAP IS HIGHER THAN BERM RIP RAP

NOTES :

FOR BERM WIDTH DIMENSIONS, SEE GENERAL DRAWING.

ESTIMATED QUANTITIES		
BRIDGE @ STA. 17+52.50 -L-	RIP RAP CLASS II (2'-0" THICK)	GEOTEXTILE FOR DRAINAGE
	TONS	SQUARE YARDS
END BENT 1	128	142
END BENT 2	103	114

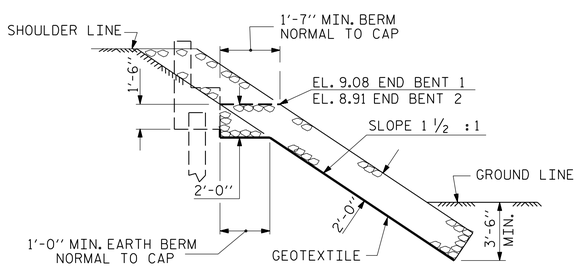

SECTION H-H

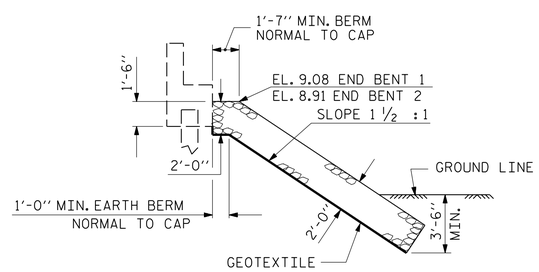

℄ SECTION

BERM RIP RAPPED

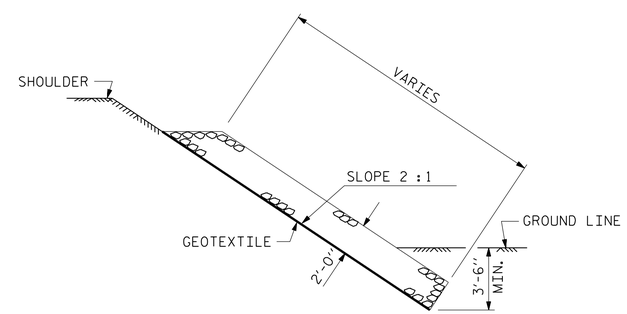

SECTION C-C

PROJECT NO. 17.BP.1.R.99

PASQUOTANK COUNTY

STATION: 17+52.50 -L-

DOCUMENT NOT CONSIDERED FINAL UNLESS ALL SIGNATURES COMPLETED

THIS STANDARD DRAWING REVIEWED & ADOPTED FOR USE AT THE REFERENCED LOCATION BY THE UNDERSIGNED:

NORTH CAROLINA PROFESSIONAL SEAL ENGINEER GWENDOLEN F. WILSON 045282

DocuSigned by: Gwendolen F. Wilson

10/12/2021

PLANS PREPARED BY:

NV5 ENGINEERS & CONSULTANTS, INC.
3300 REGENCY PARKWAY, SUITE 100
CARY, NC 27518
P: 919.851.1912 www.NV5.com
NC License # F-1333
formerly CALYX Engineers & Consultants

STATE OF NORTH CAROLINA
DEPARTMENT OF TRANSPORTATION
RALEIGH

STANDARD

RIP RAP DETAILS

REVISIONS								SHEET NO.
NO.	BY:	DATE:	NO.	BY:	DATE:			S-11
1			3					TOTAL SHEETS
2			4					13

ASSEMBLED BY : W. B. ALLEN		DATE : 11/20	
CHECKED BY : G. F. WILSON		DATE : 1/21	
DRAWN BY : REK 1/84	REV. 10/1/11	MAA/GM	
CHECKED BY : RDU 1/84	REV. 12/21/11	MAA/GM	
	REV. 12/17	MAA/THC	

10/12/2021 10:46:7 AM R:\Structures\TBP.JR.99_SMU_RR_690025.dgn

STD. NO. RR1 (Sht 1)