DocuSign Envelope ID: 3F210419-10E7-418B-B9DE-EFEABE23958E

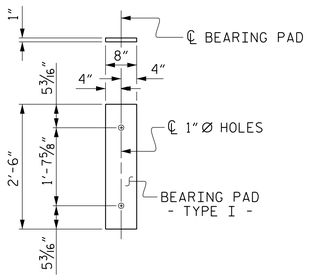

FIXED END
(TYPE I - 22 REQ'D)

ELASTOMERIC BEARING DETAILS

ELASTOMER IN ALL BEARINGS SHALL BE 50 DUROMETER HARDNESS.

BILL OF MATERIAL FOR VERTICAL CONCRETE BARRIER RAIL

BAR	BARS PER PAIR OF EXTERIOR UNITS	TOTAL NO.	SIZE	TYPE	LENGTH	WEIGHT
	55' UNIT					
✱B14	80	80	#5	STR	15'-5"	1286
✱ S4	128	128	#5	2	7'-2"	957
✱ EPOXY COATED REINFORCING STEEL				LBS.		2243
CLASS AA CONCRETE				CU.YDS.		14.1
TOTAL VERTICAL CONCRETE BARRIER RAIL				LN. FT.		110.25

DEAD LOAD DEFLECTION AND CAMBER

	3'-0" x 1'-9"
55' CORED SLAB UNIT	0.6" Ø L.R. STRAND
CAMBER (SLAB ALONE IN PLACE)	1 1/2" ↑
DEFLECTION DUE TO SUPERIMPOSED DEAD LOAD✱✱	3/8" ↓
FINAL CAMBER	1 1/8" ↑

✱✱ INCLUDES FUTURE WEARING SURFACE

BAR TYPES

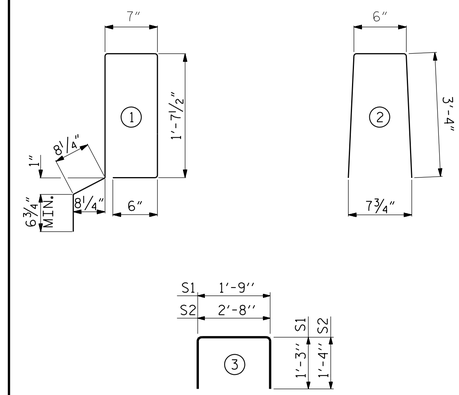

ALL BAR DIMENSIONS ARE OUT TO OUT

NOTES

ALL PRESTRESSING STRANDS SHALL BE 7-WIRE LOW RELAXATION GRADE 270 STRANDS AND SHALL CONFORM TO AASHTO M203 EXCEPT FOR SAMPLING REQUIREMENTS WHICH SHALL BE IN ACCORDANCE WITH THE STANDARD SPECIFICATIONS.

ALL REINFORCING STEEL CAST WITH THE CORED SLAB SECTIONS SHALL BE GRADE 60 AND SHALL BE INCLUDED IN THE UNIT PRICE BID FOR PRESTRESSED CONCRETE CORED SLABS.

RECESSES FOR TRANSVERSE STRANDS SHALL BE GROUTED AFTER THE TENSIONING OF THE STRANDS.

THE 2 1/2" Ø DOWEL HOLES AT FIXED ENDS OF SLAB SECTIONS SHALL BE FILLED WITH NON-SHRINK GROUT.

THE BACKER RODS SHALL CONFORM TO THE REQUIREMENTS OF TYPE M BOND BREAKER. SEE SECTION 1028 OF THE STANDARD SPECIFICATIONS.

WHEN CORED SLABS ARE CAST, AN INTERNAL HOLD-DOWN SYSTEM SHALL BE EMPLOYED TO PREVENT VOIDS FROM RISING OR MOVING SIDEWAYS. AT LEAST SIX WEEKS PRIOR TO CASTING CORED SLABS, THE CONTRACTOR SHALL SUBMIT TO THE ENGINEER FOR REVIEW AND COMMENT, DETAILED DRAWINGS OF THE PROPOSED HOLD-DOWN SYSTEM. IN ADDITION TO STRUCTURAL DETAILS, LOCATION AND SPACING OF THE HOLD-DOWNS SHALL BE INDICATED.

ALL REINFORCING STEEL IN THE VERTICAL CONCRETE BARRIER RAIL SHALL BE EPOXY COATED.

PRESTRESSING STRANDS SHALL BE CUT FLUSH WITH THE CORED SLAB UNIT ENDS.

APPLY EPOXY PROTECTIVE COATING TO CORED SLAB UNIT ENDS.

GROOVED CONTRACTION JOINTS, 1/2" IN DEPTH, SHALL BE TOOLED IN ALL EXPOSED FACES OF THE BARRIER RAIL AND IN ACCORDANCE WITH ARTICLE 825-10(B) OF THE STANDARD SPECIFICATIONS. A CONTRACTION JOINT SHALL BE LOCATED AT EACH THIRD POINT BETWEEN BARRIER RAIL EXPANSION JOINTS. ONLY ONE CONTRACTION JOINT IS REQUIRED AT MIDPOINT OF BARRIER RAIL SEGMENTS LESS THAN 20 FEET IN LENGTH AND NO CONTRACTION JOINTS ARE REQUIRED FOR THOSE SEGMENTS LESS THAN 10 FEET IN LENGTH.

FLAME CUTTING OF THE TRANSVERSE POST-TENSIONING STRAND IS NOT ALLOWED.

THE TRANSFER OF LOAD FROM THE ANCHORAGES TO THE CORED SLAB UNIT SHALL BE DONE WHEN THE CONCRETE HAS REACHED A COMPRESSIVE STRENGTH OF NOT LESS THAN THE REQUIRED STRENGTH SHOWN IN THE "CONCRETE RELEASE STRENGTH" TABLE.

FOR GROUT FOR STRUCTURES, SEE SPECIAL PROVISIONS.

THE PERMITTED THREADED INSERTS ARE DETAILED AS AN OPTION FOR THE CONTRACTOR TO ATTACH FALSEWORK AND FORMWORK DURING CONSTRUCTION.

THE PERMITTED THREADED INSERTS IN THE EXTERIOR UNITS SHALL BE SIZED BY THE CONTRACTOR, SPACED AT 4'-0" CENTERS AND GALVANIZED IN ACCORDANCE WITH SECTION 1076 OF THE STANDARD SPECIFICATIONS. STAINLESS STEEL THREADED INSERTS MAY BE USED AS AN ALTERNATE.

THE PERMITTED THREADED INSERTS SHALL BE GROUTED BY THE CONTRACTOR IMMEDIATELY FOLLOWING REMOVAL OF THE FALSEWORK.

THE COST OF THE PERMITTED THREADED INSERTS SHALL BE INCLUDED IN THE PRICE BID FOR THE PRECAST UNITS.

GUTTERLINE ASPHALT THICKNESS & RAIL HEIGHT

	ASPHALT OVERLAY THICKNESS	RAIL HEIGHT
	@ MID-SPAN	@ MID-SPAN
55' UNITS	1 5/8"	3'-7 5/8"

BILL OF MATERIAL FOR ONE 55' CORED SLAB UNIT

				EXTERIOR UNIT		INTERIOR UNIT	
BAR	NUMBER	SIZE	TYPE	LENGTH	WEIGHT	LENGTH	WEIGHT
B7	4	#4	STR	28'-3"	75	28'-3"	75
S1	8	#5	3	4'-3"	35	4'-3"	35
S2	128	#4	3	5'-4"	456	5'-4"	456
✱ S3	64	#5	1	5'-7"	373		
REINFORCING STEEL			LBS.		566		566
✱ EPOXY COATED REINFORCING STEEL			LBS.		373		
6500 P.S.I. CONCRETE			CU. YDS.		7.9		7.9
0.6" Ø L.R. STRANDS			No.		19		19

GRADE 270 STRANDS

	0.6" Ø L.R.
AREA (SQUARE INCHES)	0.217
ULTIMATE STRENGTH (LBS. PER STRAND)	58,600
APPLIED PRESTRESS (LBS. PER STRAND)	43,950

CONCRETE RELEASE STRENGTH

UNIT	PSI
55' UNITS	4900

CORED SLABS REQUIRED

	NUMBER	LENGTH	TOTAL LENGTH
55' UNIT			
EXTERIOR C.S.	2	55'-0"	110'-0"
INTERIOR C.S.	9	55'-0"	495'-0"
TOTAL			605'-0"

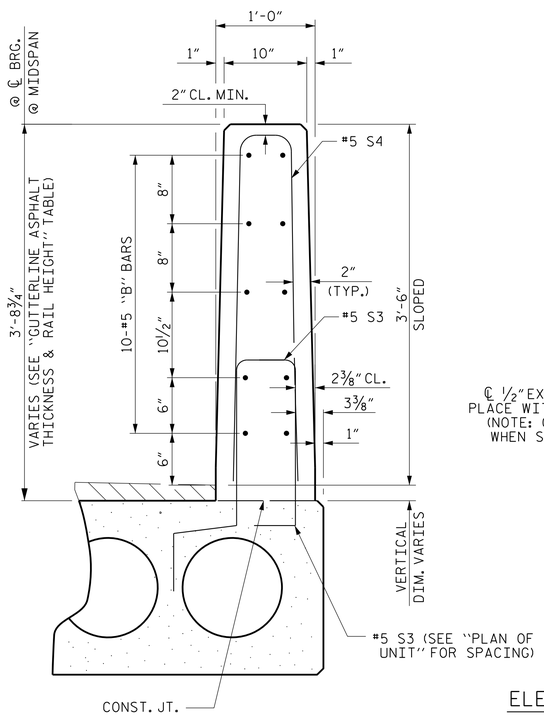

VERTICAL CONCRETE BARRIER RAIL SECTION

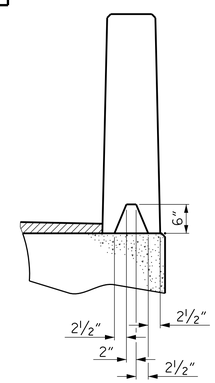

SECTION S-S

AT DAM IN OPEN JOINT
(THIS IS TO BE USED ONLY WHEN SLIP FORM IS USED)

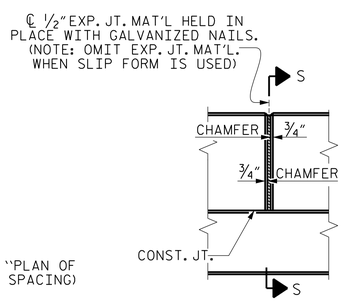

ELEVATION AT EXPANSION JOINTS

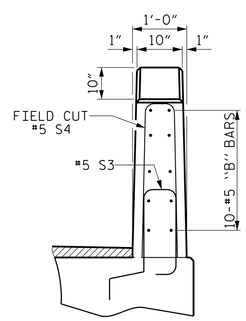

END VIEW

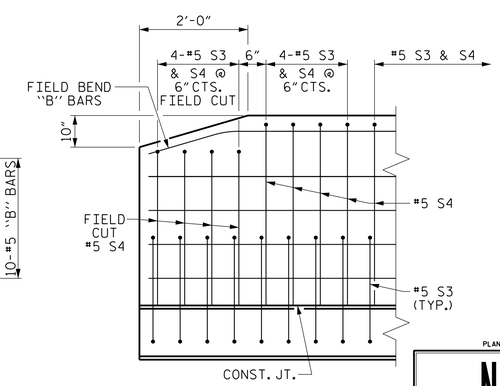

SIDE VIEW

END OF RAIL DETAILS

PLANS PREPARED BY:

NV5 ENGINEERS & CONSULTANTS, INC.
3300 REGENCY PARKWAY, SUITE 100
CARY, NC 27518
P: 919.851.1912 www.NV5.com
NC License # F-1333
formerly CALYX Engineers & Consultants

DOCUMENT NOT CONSIDERED FINAL UNLESS ALL SIGNATURES COMPLETED

NORTH CAROLINA PROFESSIONAL SEAL ENGINEER WENDOLEN F. WILSON 10/12/2021
DocuSigned by: Wendolen F. Wilson
DESIGN ENGINEER

PROJECT NO. 17BP.1.R.99
PASQUOTANK COUNTY
STATION: 17+52.50 -L-

SHEET 3 OF 3

STATE OF NORTH CAROLINA
DEPARTMENT OF TRANSPORTATION
RALEIGH

3'-0" X 1'-9" PRESTRESSED CONCRETE CORED SLAB UNIT 75° SKEW

30'-10" CLEAR ROADWAY - 75° SKEW

REVISIONS						SHEET NO.
NO.	BY:	DATE:	NO.	BY:	DATE:	S-6
1			3			TOTAL SHEETS
2			4			13

DRAWN BY : W. B. ALLEN DATE : 7/19
CHECKED BY : G. F. WILSON DATE : 1/21
DESIGN ENGINEER OF RECORD: G. F. WILSON DATE : 10/21

10/12/2021 10:40:0 AM R:\Structures\17BP.1.R.99_SMU_CS3_680025.dgn