DocuSign Envelope ID: 3F210419-10E7-418B-B9DE-EFEABE23958E

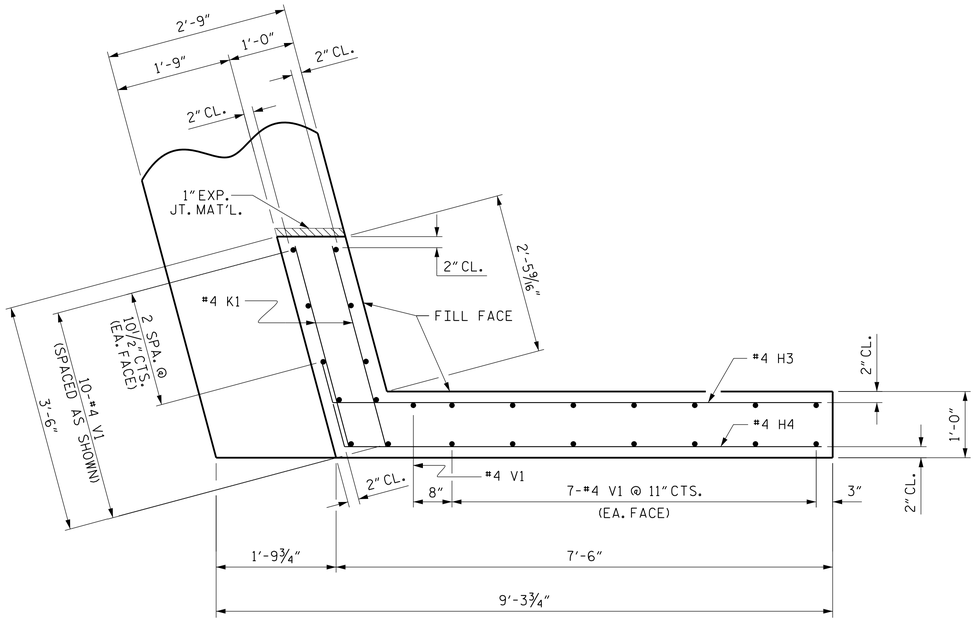

PLAN OF WING (W1)

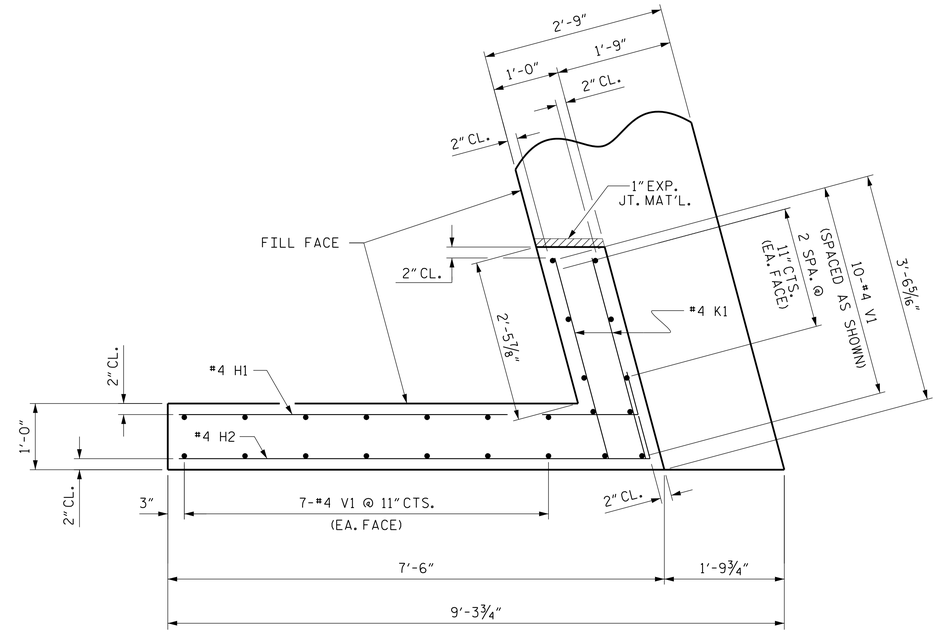

PLAN OF WING (W2)

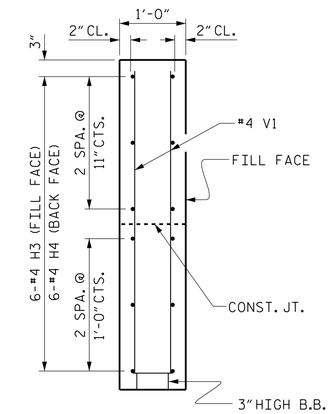

SECTION X-X

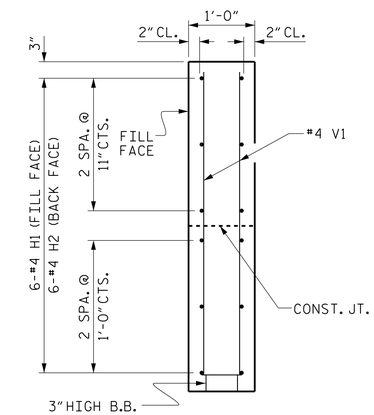

SECTION Y-Y

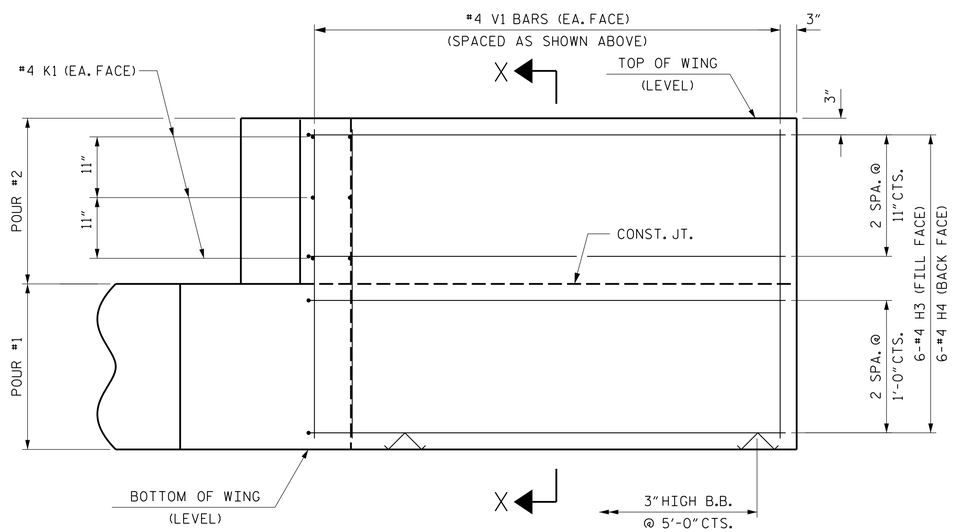

ELEVATION OF WING (W1)

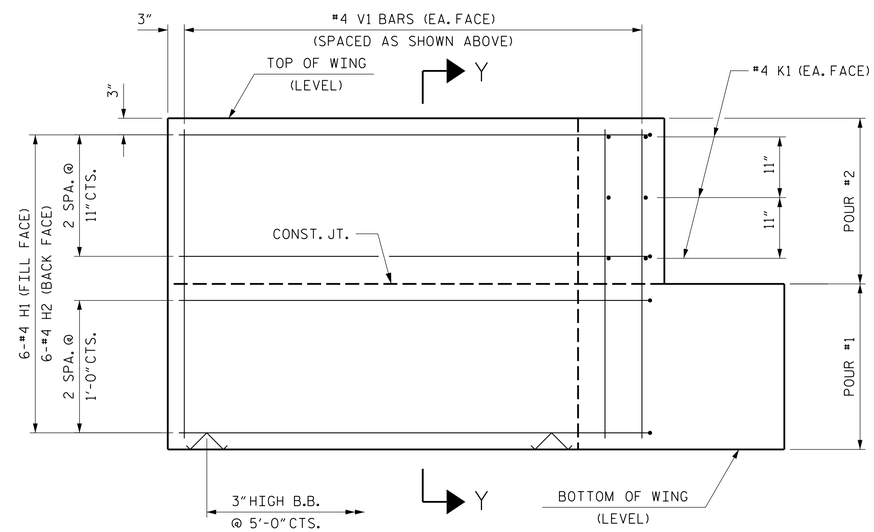

ELEVATION OF WING (W2)

WING DETAILS

PROJECT NO. 17.BP.1.R.99

PASQUOTANK COUNTY

STATION: 17+52.50 -L-

SHEET 3 OF 4

PLANS PREPARED BY:

NV5 ENGINEERS & CONSULTANTS, INC.
3300 REGENCY PARKWAY, SUITE 100
CARY, NC 27518
P: 919.851.1912 www.NV5.com
NC License # F-1333
formerly CALYX Engineers & Consultants

DOCUMENT NOT CONSIDERED FINAL UNLESS ALL SIGNATURES COMPLETED

THIS STANDARD DRAWING REVIEWED & ADOPTED FOR USE AT THE REFERENCED LOCATION BY THE UNDERSIGNED:

NORTH CAROLINA PROFESSIONAL SEAL ENGINEER 19282 GWENDOLEN F. WILSON

DocuSigned by: Gwendolen Wilson 3B1C8F4A4A8B282...

10/12/2021

STATE OF NORTH CAROLINA
DEPARTMENT OF TRANSPORTATION
RALEIGH

SUBSTRUCTURE
END BENT
WING DETAILS

REVISIONS						SHEET NO.
NO.	BY:	DATE:	NO.	BY:	DATE:	S-9
1			3			TOTAL SHEETS
2			4			13

STD. NO. EB_33_75S

ASSEMBLED BY : W. B. ALLEN		DATE : 7/19	
CHECKED BY : G. F. WILSON		DATE : 1/21	
DRAWN BY : DGE 03/10	REV. 4/15	MAA/TMG	
CHECKED BY : MKT 03/10			

10/12/2021 10:44:44 AM R:\Structures\17BP.R.99_SMU_E3_690025.dgn