DocuSign Envelope ID: 3F210419-10E7-418B-B9DE-EFEABE23958E

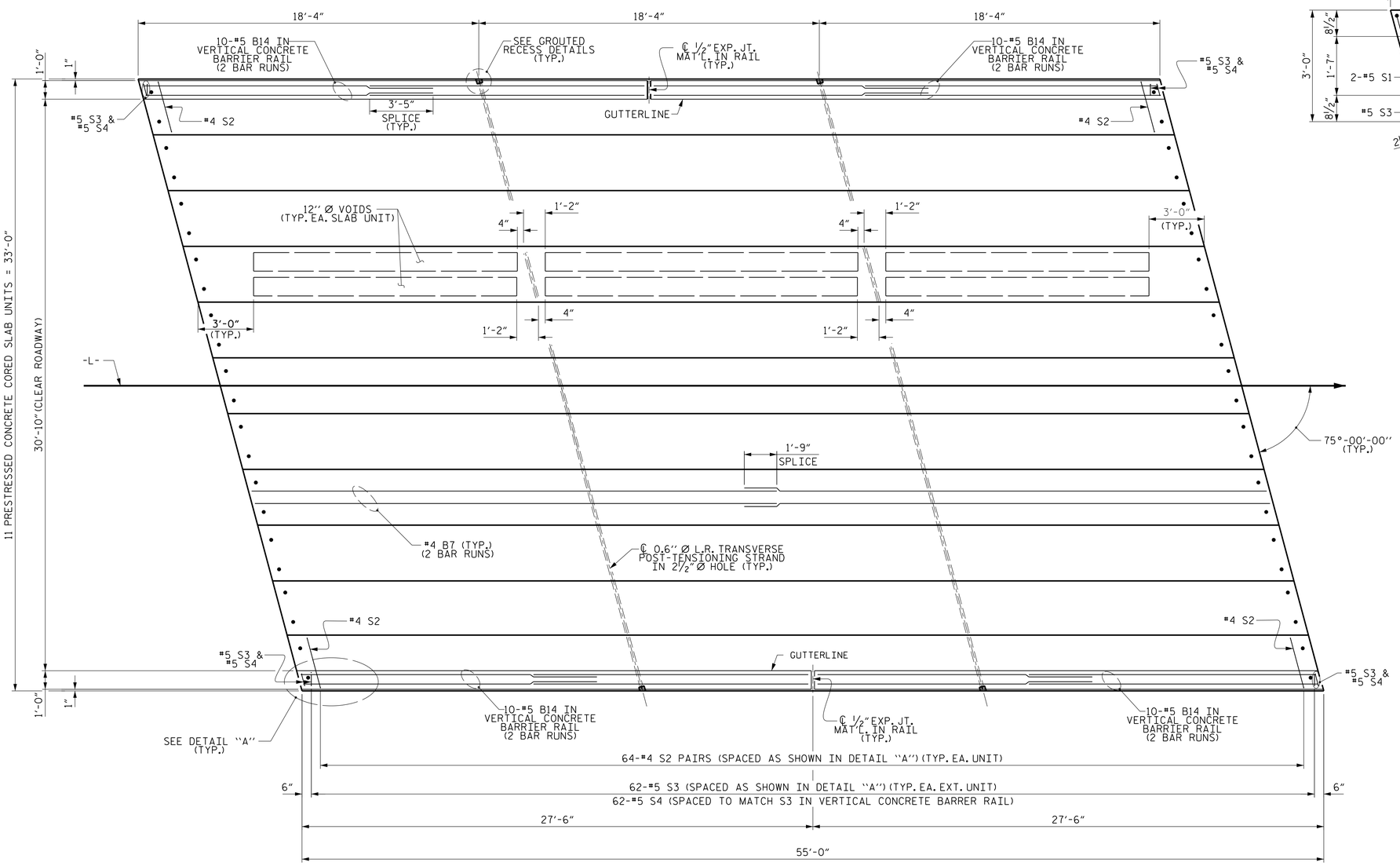

PLAN OF UNIT

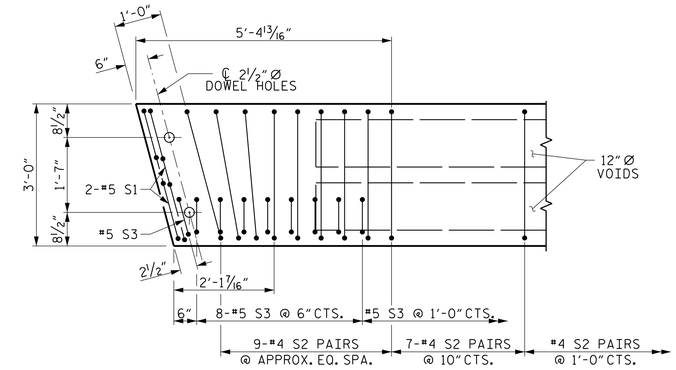

DETAIL "A"

(SIMILAR EACH END OF UNIT)
NOTE: EXTERIOR UNIT SHOWN - INTERIOR UNIT SIMILAR EXCEPT OMIT #5 S3 BARS.

PROJECT NO. 17BP.1.R.99
PASQUOTANK COUNTY
STATION: 17+52.50 -L-

SHEET 2 OF 3

STATE OF NORTH CAROLINA
DEPARTMENT OF TRANSPORTATION
RALEIGH

PLAN OF 55' UNIT 30'-10" CLEAR ROADWAY 75° SKEW

30'-10" CLEAR ROADWAY - 75° SKEW

PLANS PREPARED BY:

NV5 ENGINEERS & CONSULTANTS, INC.
3300 REGENCY PARKWAY, SUITE 100
CARY, NC 27518
P: 919.851.1912 www.NV5.com
NC License # F-1333
formerly GALYK Engineers & Consultants

DOCUMENT NOT CONSIDERED FINAL UNLESS ALL SIGNATURES COMPLETED

NORTH CAROLINA PROFESSIONAL SEAL ENGINEER GERALD FREDOLEN WILSON
DocuSigned by: Gerald Fredolen Wilson
B8DC9F4D4348BB2...
10/12/2021

REVISIONS						
NO.	BY:	DATE:	NO.	BY:	DATE:	
1			3			
2			4			

SHEET NO. S-5
TOTAL SHEETS 13

DRAWN BY : W. B. ALLEN DATE : 7/19
CHECKED BY : G. F. WILSON DATE : 1/21
DESIGN ENGINEER OF RECORD: G. F. WILSON DATE : 10/21

10/12/2021 10:04:09 AM R:\Structures\17BP.1.R.99_SMU_CS2_690025.dgn